AV Benching
(800)328-6378
Info@AVBenching.com

Drawn By BLR 11/17/25

Right Fixed Leg Corner Template

****Only used on 2', 4.5', Some 6'and 7.5' wide benches****

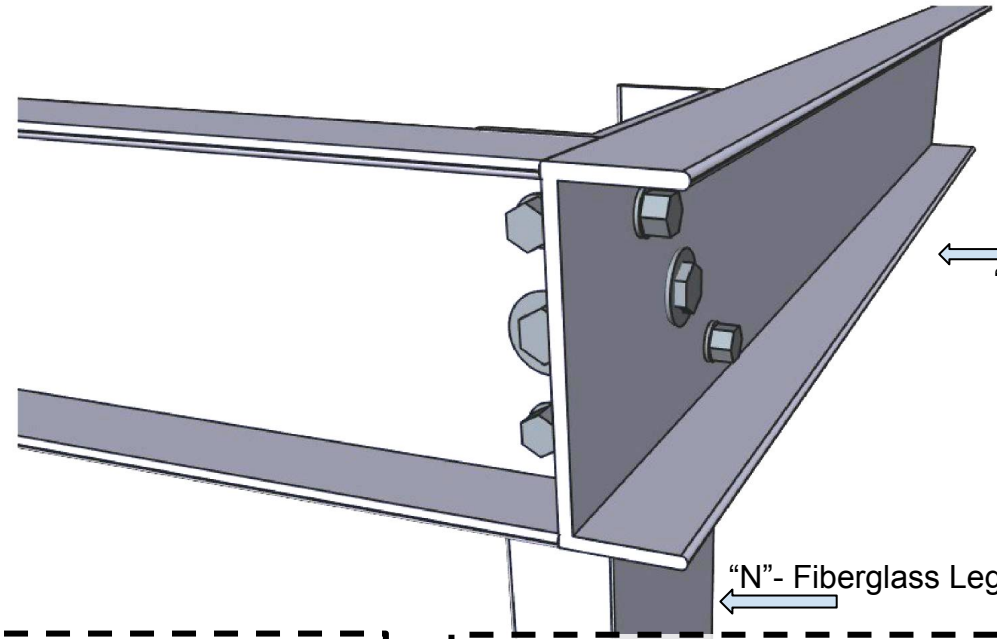

Access more copies?
Scan Below

AVBenching.com

Place this cutout on "**B**" Exterior Channel to connect to the **Narrow** side of "**N**" Fiberglass Leg

Part "S" #12 X ¾" Screw

Drill **¼" Hole To use provide hole for part "V" Hex Bolt ¼"X 1"**

Part "S" #12 X ¾" Screw

Put this edge flush along the edge of the channel

Cut along dotted lines

Put this edge flush along the edge of the channel

Place this cutout on "**A**" Exterior Channel to connect to the **Wide** side of "**N**" Fiberglass Leg

Part "S" #12 X ¾" Screw

Drill **¼" Hole To use provide hole for part "V" Hex Bolt ¼"X 1"**

Part "S" #12 X ¾" Screw